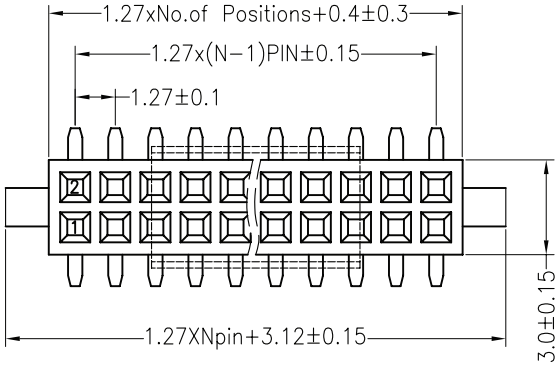

Recommended P.C.B Layout(Top Side)
(PCB BOARD TOLERANCE±0.05)

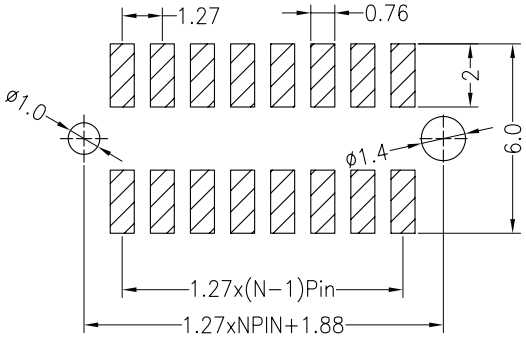

SPECIFICATIONS
Rated Current:1.0AMP
Contact Resistance:20mΩ Max
Withstand Voltage:500V AC/DC
Insulation Resistance:1000MΩ Min
Operation Temperature:−40˚c to +105˚c

Contact Material:Brass
Contact Plating:Au Over Ni
Insulator Material:Polyester(UL94V−0)
Standard: PA6T
Max.Processing Temp: 230˚C for 30−60 seconds
(260˚C for 10 seconds)

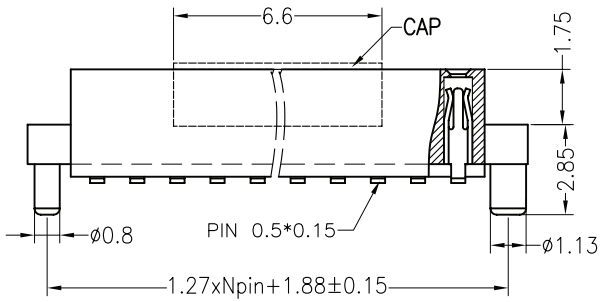

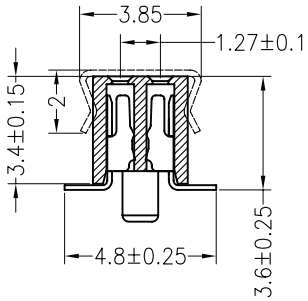

FAMILY	PITCH		N° ROWS	N° PIN P.R.	VERSION	CLIP PLATING	HEIGHT	OPTION	PACKAGE
FH	127	-	2	XX	M [SMT straight]	F [flash gold]	034	C0 [Standard]	T [tube]
						G [15u gold]			W [reel+caps]

euro-conn

RoHS Compliant Lead Free

UNITS: mm	SHEET SIZE: ISO A4	SCALE:---	
> 0 ~ 3	> 3 ~ 18	> 18 ~ 50	> 50 ~ 120
± 0.12	± 0.15	± 0.3	± 0.5

First angle projection

FEMALE HEADER