1. Electrical Specifications:@25℃

1.1. Isolation Voltage: 1500V/AC(Input to Output)

1.2. OCL:350uH Minimum @100KHz 100mV 8mA DC

1.3. Instertion Loss: -1.2dB Maximum @100KHz-100MHz

1.4. Return Loss: -18dB Minimum @1MHz-30MHz
-14dB Minimum @30MHz-60MHz
-12dB Minimum @60MHz-80MHz
-10dB Minimum @80MHz-100MHz

1.5. Common Mode Rejection: -30dB Minimum @1MHz-100MHz

1.6. Cross Talk: -30dB Minimum @1MHz-100MHz

2. Operating and Storage Temperature:

2.1. Operating Temperature:-40℃ to +85℃

2.2 . Storage Temperature:-40℃ to +85℃

3. Schematics:

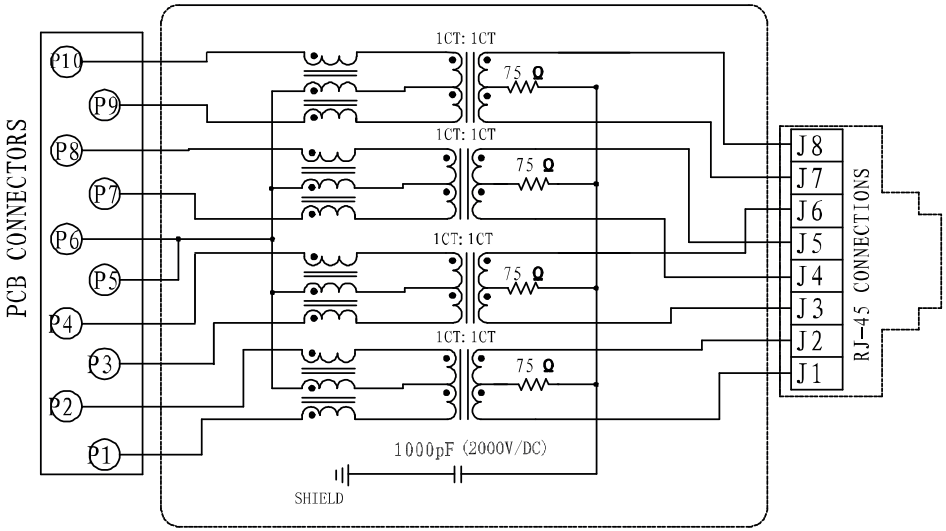

4. Mechanicals:

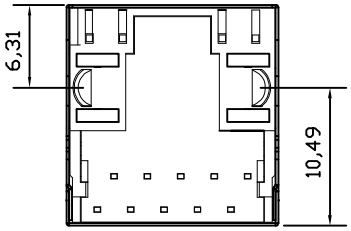

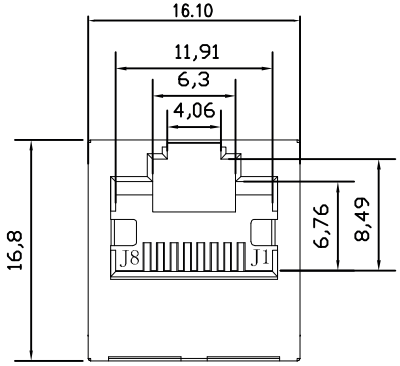

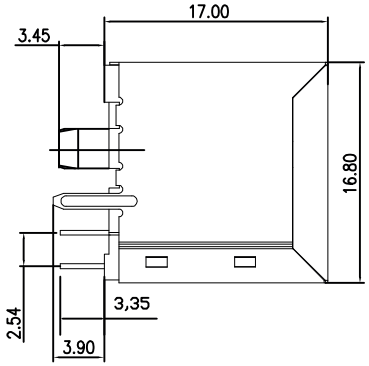

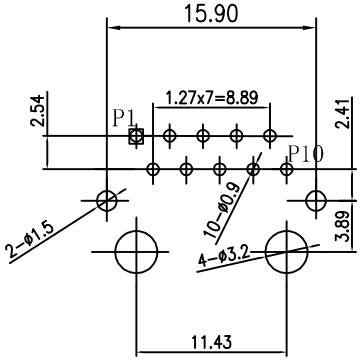

P.C.B RECOMMENDED HOLE LAYOUT SEEEN FROM COMPONENT SIDE.
ALL CENTERLINE DIMENSIONS ARE BASIC

4.1. Connector Material:
Housing:Thermoplastic UL94 V-0
Contact/Shield:Cooper alloy
Shield Plating:Nickel
Contact Plating:Selective gold 6u"; 15u"; 30u"; 50u"Min

4.2. Tolerances comply with F.C.C dimension requirements

4.3. Durability:800 mating Min

4.4. Meets or Exceeds IEEE802.3af standards
including 350uH Min OCL @100KHz 100mV 8mA DC

FAMILY		MODEL	VERSION
MJSM	-	1108	A2008

euro-conn

RoHS Compliant Lead Free

UNITS: mm	SHEET SIZE: ISO A4	SCALE: ----	
> 0 ~ 3	> 3 ~ 18	> 18 ~ 50	> 50 ~ 120
± 0.12	± 0.15	± 0.3	± 0.5

! I prodotti e le caratteristiche possono cambiare senza preavviso.
The products and their features may change without notice.

MAG-JACK