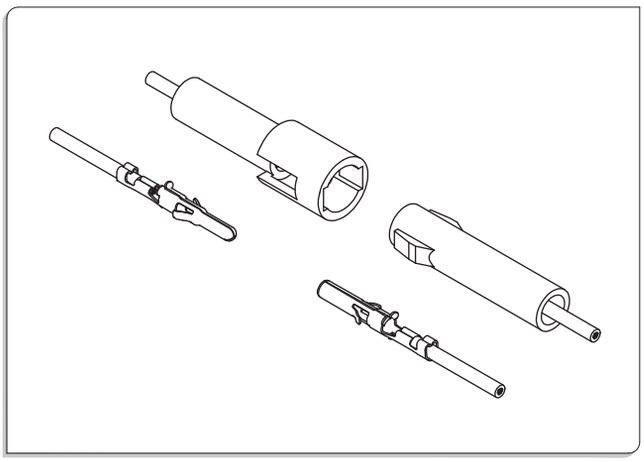

Specifications

- 1、Poles：1P
- 2、Current rating：5A AC,DC
- 3、Voltage rating：250V AC,DC
- 4、Temperature range：-25℃ to +85℃
  (Including temperature rise in applying electrical current)
- 5、Contact resistance： Initial value / ≤ 10mΩ
  After environmental testing / ≤ 20mΩ
- 6、Insulation resistance：≥ 1000MΩ
- 7、Withstanding voltage：1500V AC/minute
- 8、Applicable wire：AWG #24 to #18

Mounting Measurement

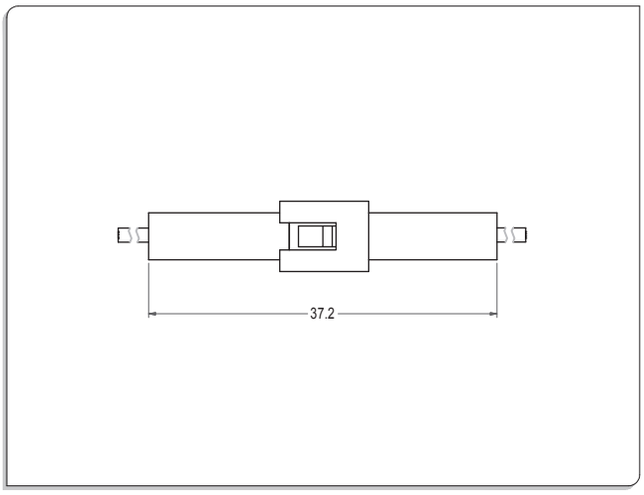

TERMINAL

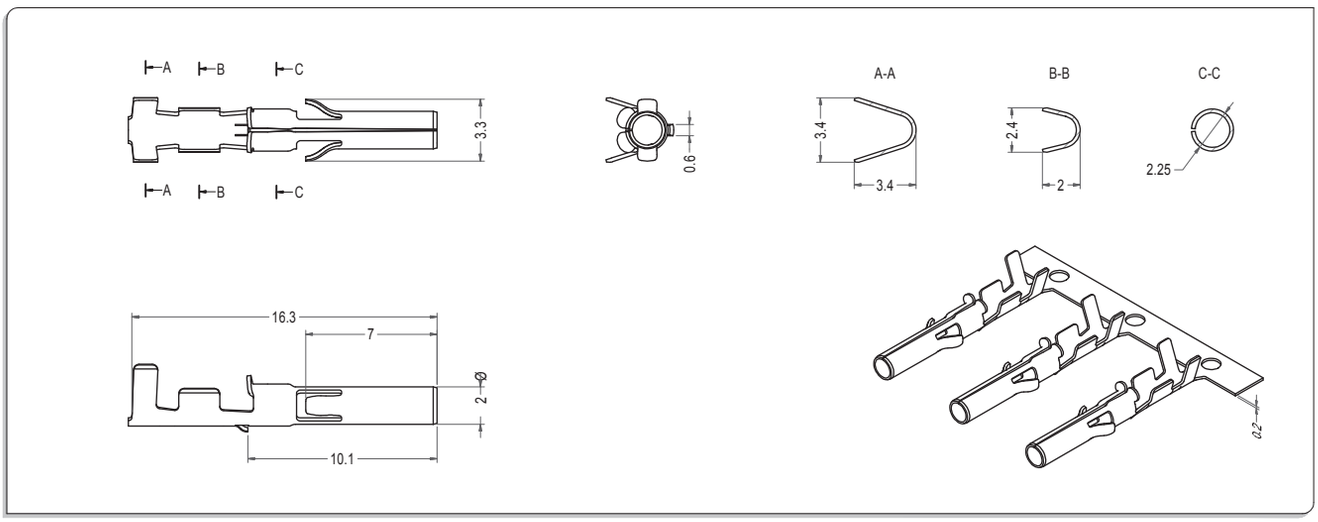

Part No.	Section Area mm	Wire Range	Insulation O.D	Material	Finish	Qty/reel
MN368FB-T1	0.22 to 0.83	AWG #24 to #18	1.5 to 2.5mm	Brass	Tin-plated	6,000pcs

HOUSING

Material：Nylon 66 UL94V-2(0)

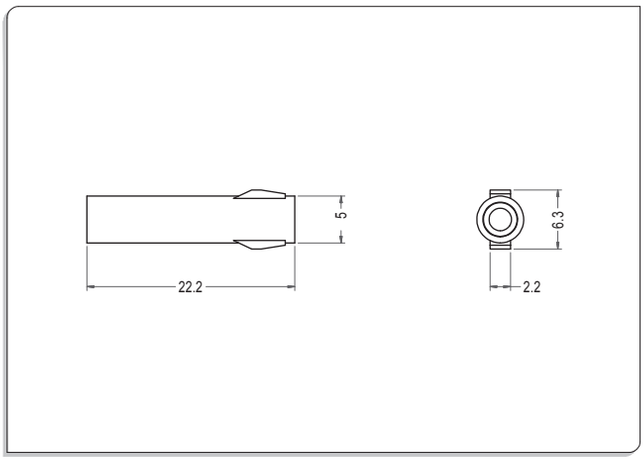

MN368M-101HWH

Material：Nylon 66 UL94V-2(0)

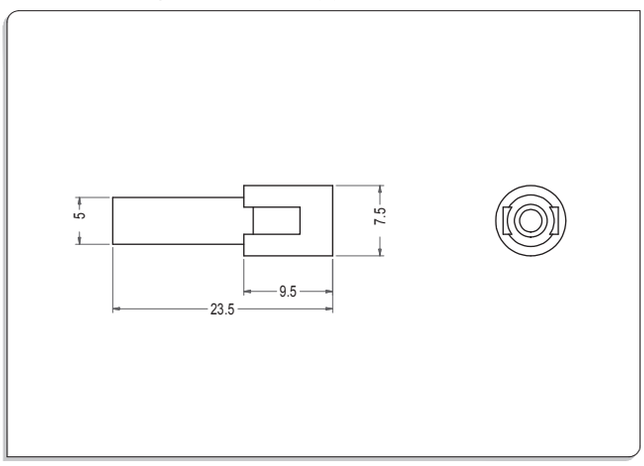

MN368F-101HWH

TERMINAL

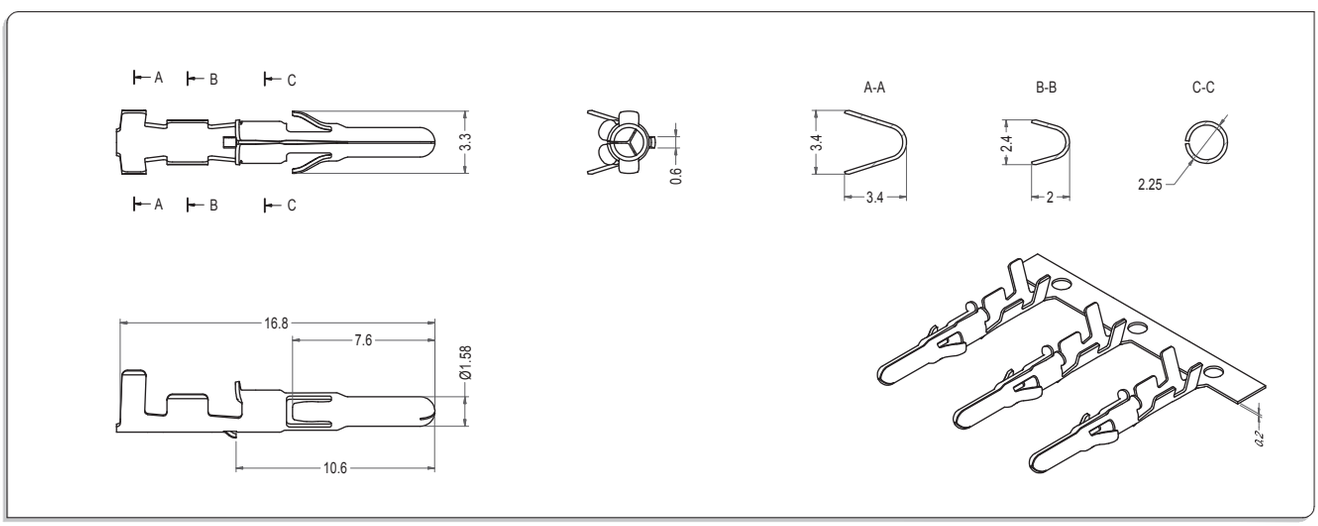

Part No.	Section Area mm	Wire Range	Insulation O.D	Material	Finish	Qty/reel
MN368MB-T1	0.22 to 0.83	AWG #24 to #18	1.5 to 2.5mm	Brass	Tin-plated	6,000pcs

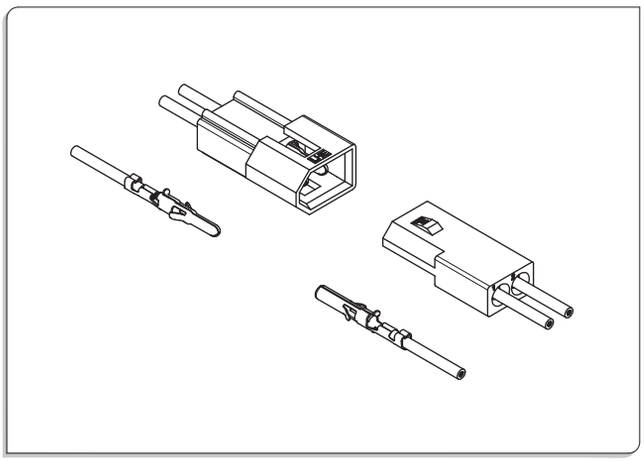

Specifications

- 1、Poles：2 to 5P
- 2、Current rating：5.0A AC,DC
- 3、Voltage rating：250V AC,DC
- 4、Temperature range：-25℃ to +85℃

  (Including temperature rise in applying electrical current)
- 5、Contact resistance： Initial value / ≤ 10mΩ
  After environmental testing / ≤ 20mΩ
- 6、Insulation resistance：≥ 1000MΩ
- 7、Withstanding voltage：1500V AC/minute
- 8、Applicable wire：AWG #24 to #18

Mounting Measurement

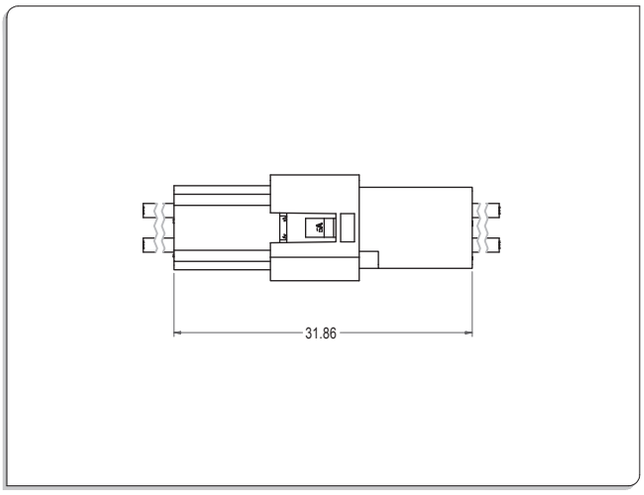

TERMINAL

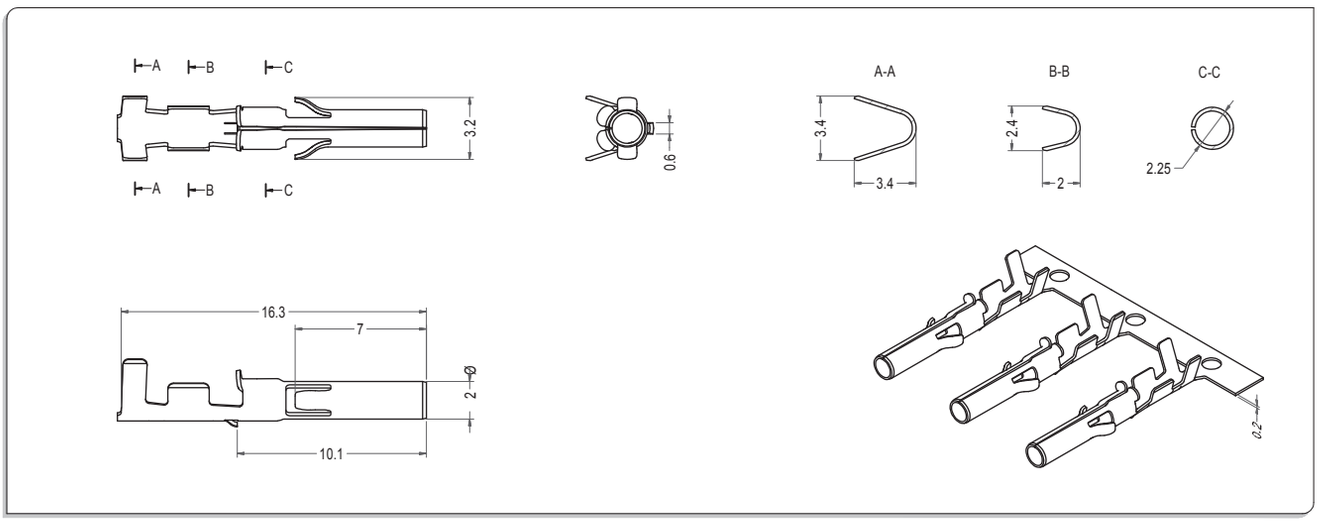

Part No.	Section Area mm	Wire Range	Insulation O.D	Material	Finish	Qty/reel
MN368FB-T1	0.22 to 0.83	AWG #24 to #18	1.5 to 2.5mm	Brass	Tin-plated	6,000pcs

HOUSING

Material：Nylon 66 UL94V-2(0)

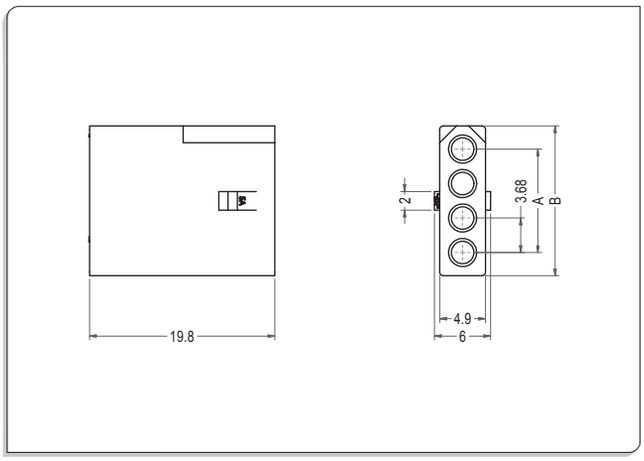

Poles	Part No.	DIM=A	DIM=B
2	MN368M-102HWH	3.68	8.64
3	MN368M-103HWH	7.36	12.32
4	MN368M-104HWH	11.04	16.00
5	MN368M-105HWH	14.72	19.68

Material：Nylon 66 UL94V-2(0)

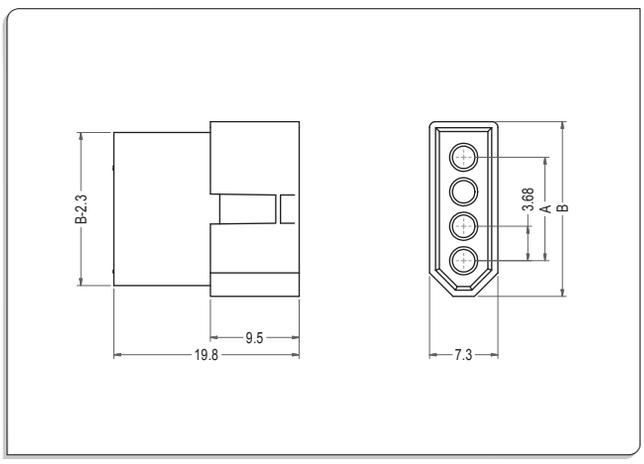

Poles	Part No.	DIM=A	DIM=B
2	MN368F-102HWH	3.68	11.28
3	MN368F-103HWH	7.36	14.96
4	MN368F-104HWH	11.04	18.64
5	MN368F-105HWH	14.72	22.32

TERMINAL

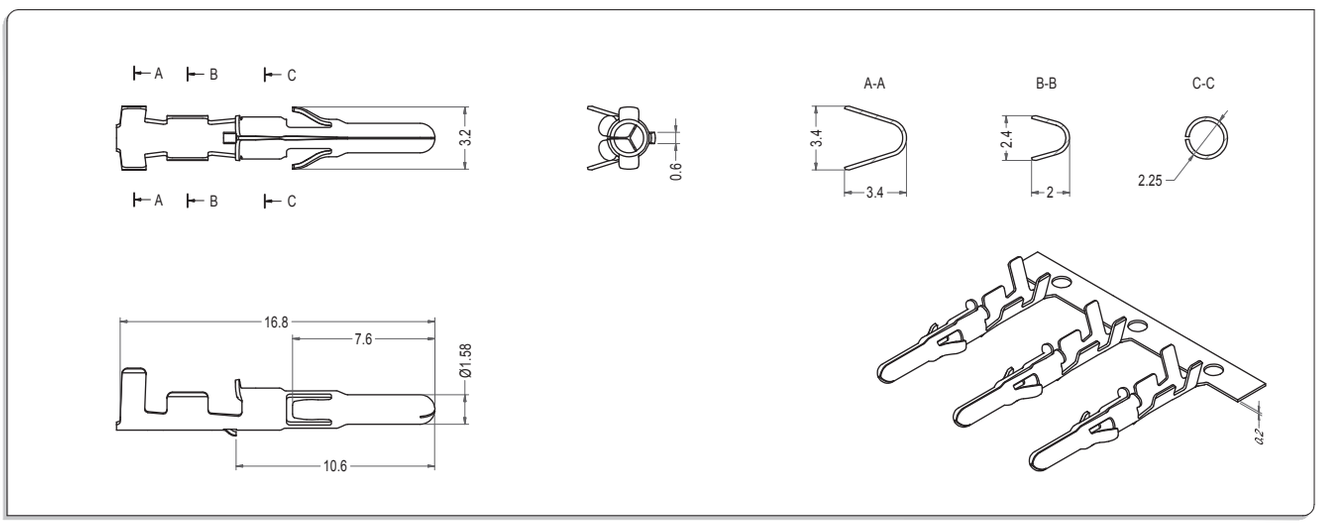

Part No.	Section Area mm	Wire Range	Insulation O.D	Material	Finish	Qty/reel
MN368MB-T1	0.22 to 0.83	AWG #24 to #18	1.5 to 2.5mm	Brass	Tin-plated	6,000pcs

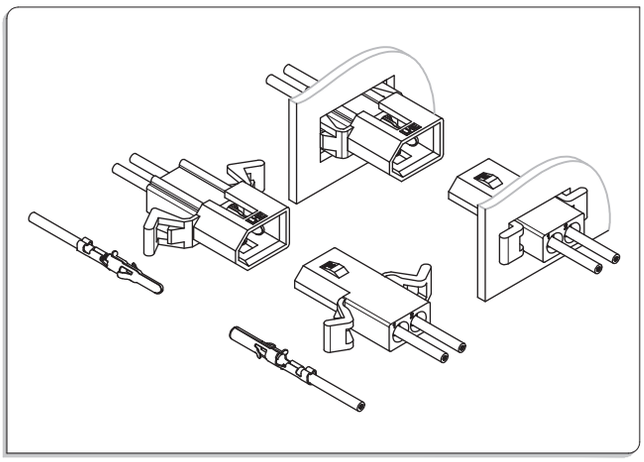

Specifications

- 1、Poles：2 to 5P
- 2、Current rating：5.0A AC,DC
- 3、Voltage rating：250V AC,DC
- 4、Temperature range：-25℃ to +85℃
  (Including temperature rise in applying electrical current)
- 5、Contact resistance： Initial value / ≤ 10mΩ
  After environmental testing / ≤ 20mΩ
- 6、Insulation resistance：≥ 1000MΩ
- 7、Withstanding voltage：1500V AC/minute
- 8、Applicable wire：AWG #24 to #18
- 9、Applicable panel thickness：1.2~1.6mm

Mounting Measurement

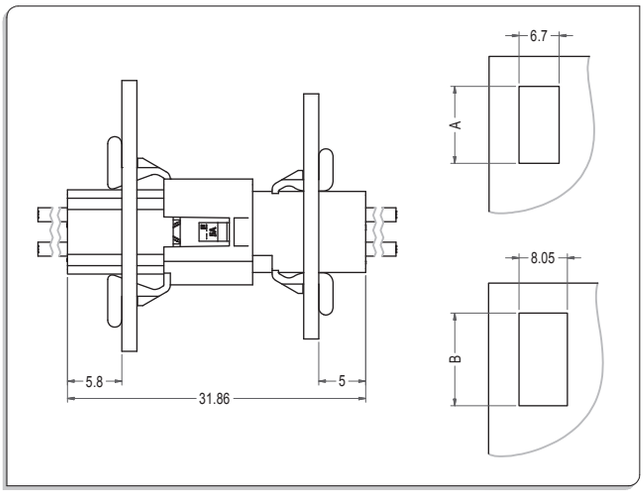

Poles	DIM=A	DIM=B
2	12.83	15.47
3	16.51	19.15
4	20.19	22.83
5	23.87	26.51

TERMINAL

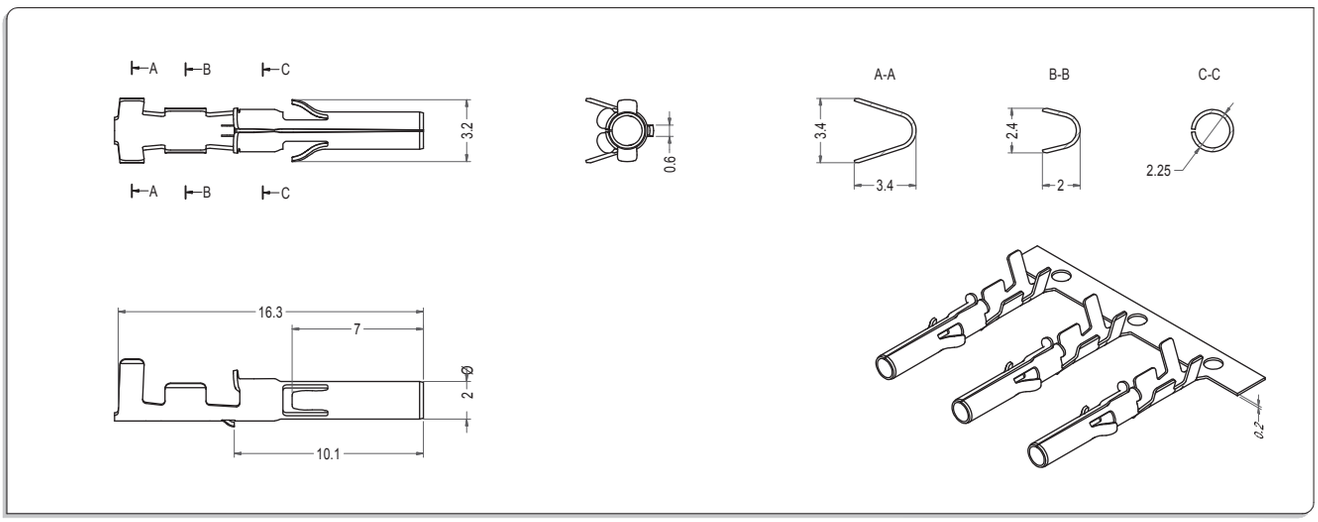

Part No.	Section Area mm	Wire Range	Insulation O.D	Material	Finish	Qty/reel
MN368FB-T1	0.22 to 0.83	AWG #24 to #18	1.5 to 2.5mm	Brass	Tin-plated	6,000pcs

HOUSING

Material： Nylon 66 UL94V-2(0)

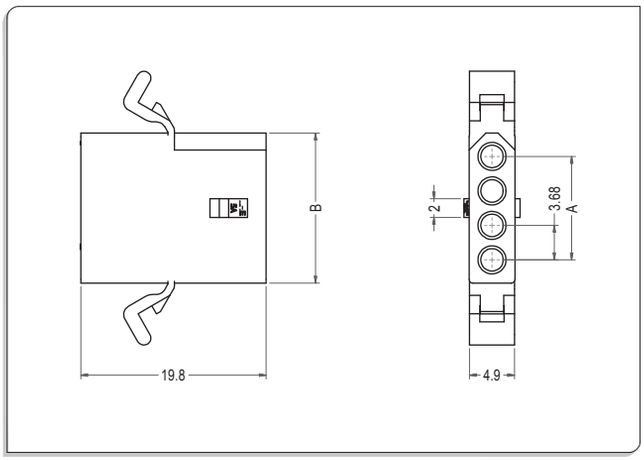

Poles	Part No.	DIM=A	DIM=B
2	MN368M-102HW2	3.68	8.64
3	MN368M-103HW2	7.36	12.32
4	MN368M-104HW2	11.04	16.00
5	MN368M-105HW2	14.72	19.68

Material： Nylon 66 UL94V-2(0)

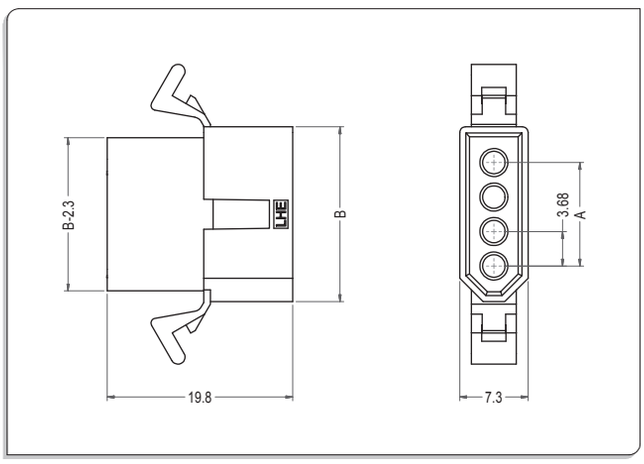

Poles	Part No.	DIM=A	DIM=B
2	MN368F-102HW2	3.68	11.28
3	MN368F-103HW2	7.36	14.96
4	MN368F-104HW2	11.04	18.64
5	MN368F-105HW2	14.72	22.32

TERMINAL

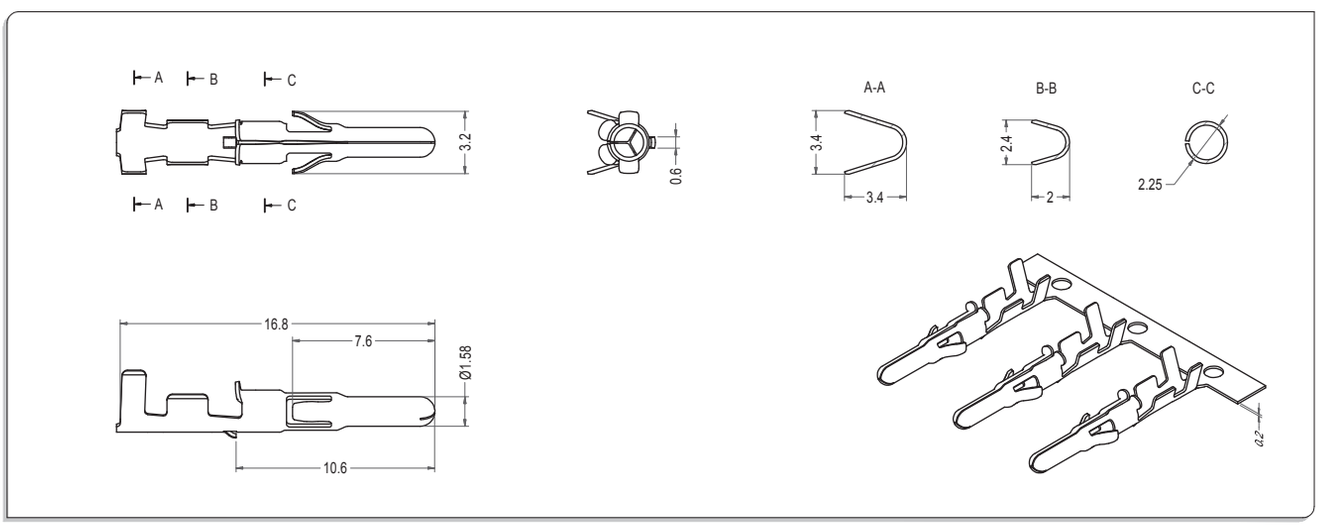

Part No.	Section Area mm	Wire Range	Insulation O.D	Material	Finish	Qty/reel
MN368MB-T1	0.22 to 0.83	AWG #24 to #18	1.5 to 2.5mm	Brass	Tin-plated	6,000pcs

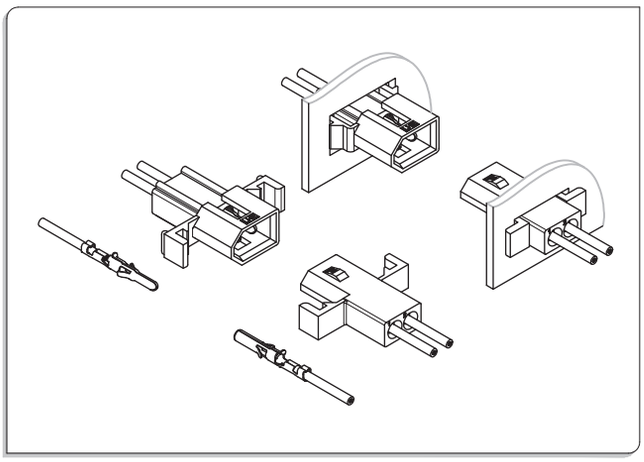

Specifications

- 1、Poles：2 to 5P
- 2、Current rating：5.0A AC,DC
- 3、Voltage rating：250V AC,DC
- 4、Temperature range：-25℃ to +85℃
  (Including temperature rise in applying electrical current)
- 5、Contact resistance： Initial value / ≤ 10mΩ
  After environmental testing / ≤ 20mΩ
- 6、Insulation resistance：≥ 1000MΩ
- 7、Withstanding voltage：1500V AC/minute
- 8、Applicable wire：AWG #24 to #18
- 9、Applicable panel thickness：1.2~1.6mm

Mounting Measurement

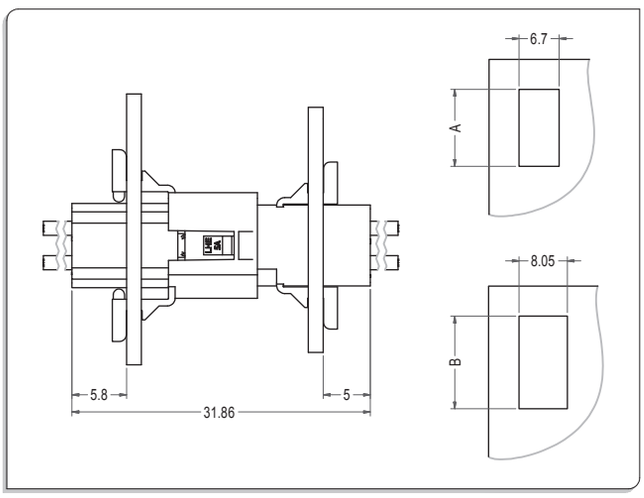

Poles	DIM=A	DIM=B
2	12.83	15.47
3	16.51	19.15
4	20.19	22.83
5	23.87	26.51

TERMINAL

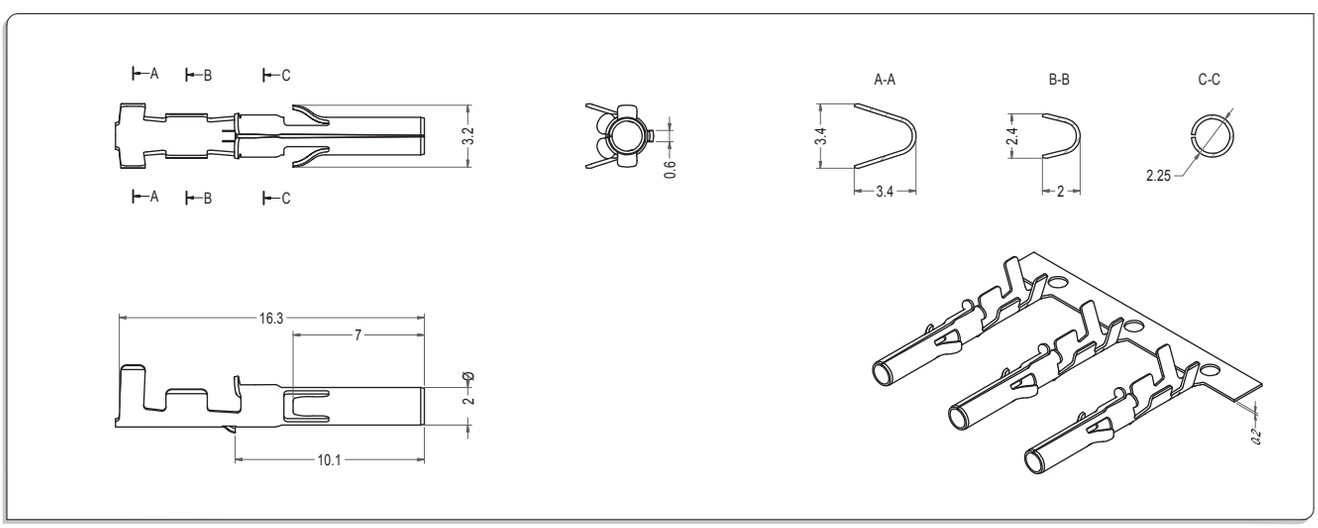

Part No.	Section Area mm	Wire Range	Insulation O.D	Material	Finish	Qty/reel
MN368FB-T1	0.22 to 0.83	AWG #24 to #18	1.5 to 2.5mm	Brass	Tin-plated	6,000pcs

HOUSING

Material： Nylon 66 UL94V-2(0)

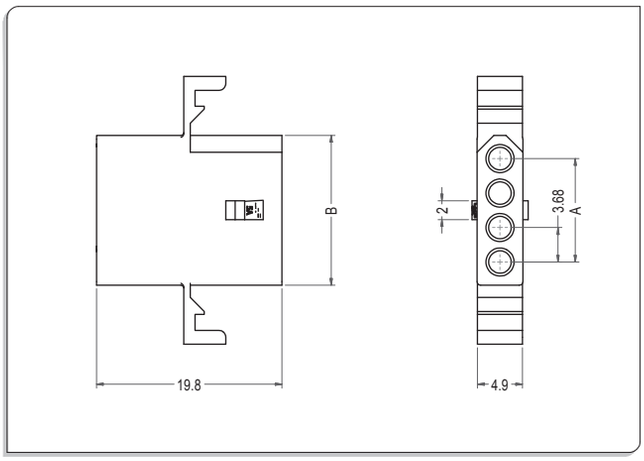

Poles	Part No.	DIM=A	DIM=B
2	MN368M-102HW3	3.68	8.64
3	MN368M-103HW3	7.36	12.32
4	MN368M-104HW3	11.04	16.00
5	MN368M-105HW3	14.72	19.68

Material： Nylon 66 UL94V-2(0)

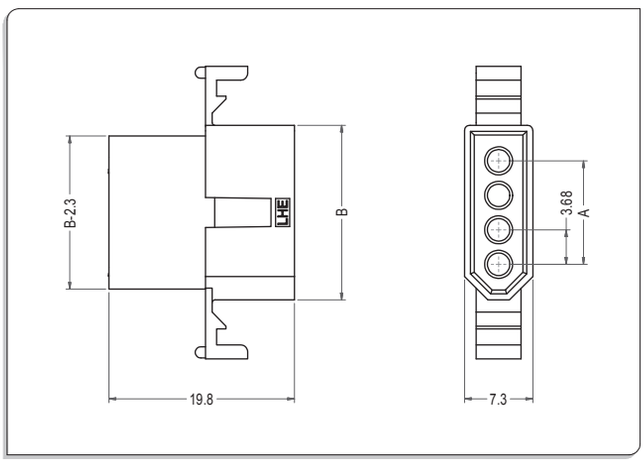

Poles	Part No.	DIM=A	DIM=B
2	MN368F-102HW3	3.68	11.28
3	MN368F-103HW3	7.36	14.96
4	MN368F-104HW3	11.04	18.64
5	MN368F-105HW3	14.72	22.32

TERMINAL

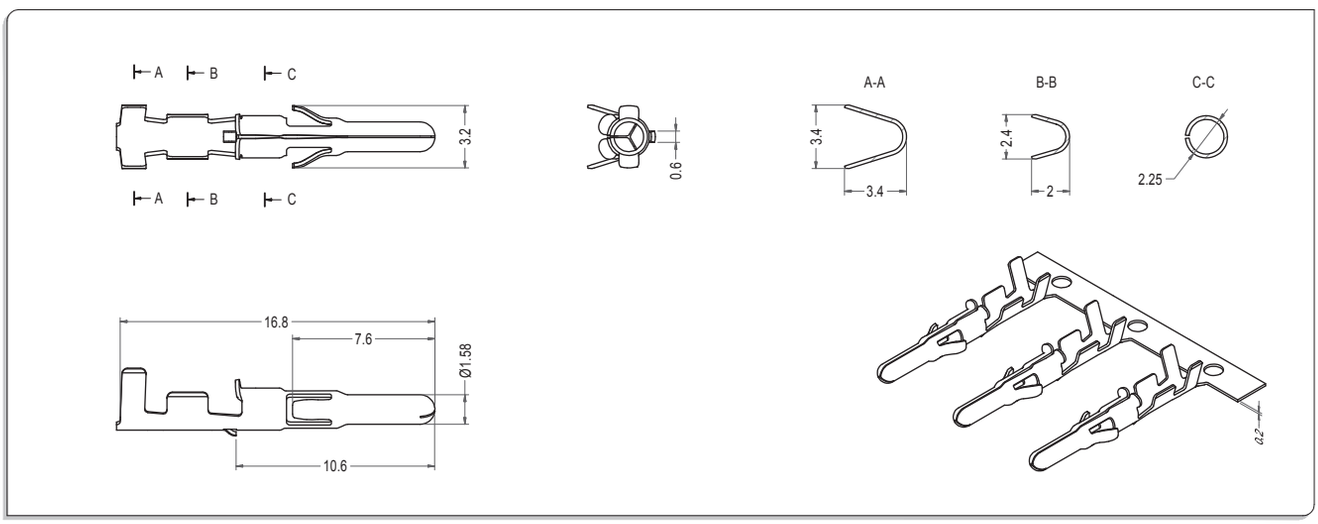

Part No.	Section Area mm	Wire Range	Insulation O.D	Material	Finish	Qty/reel
MN368MB-T1	0.22 to 0.83	AWG #24 to #18	1.5 to 2.5mm	Brass	Tin-plated	6,000pcs